SPECIFICATION FOR APPROVAL

產品規格承認書

客戶名稱
CUSTOMER: _____

產品名稱
PRODUCT NAME: _____

型號規格
MODEL: _____

日　　期
DATE: _____

審核 **CHECKED BY**	批准 **APPROVED BY**

備註：承認簽章後請回覆一份承認書（或複印件）給我司

Note: Please return one signed copy with your company chop if approved.

Technical Data for Wire Wound Ferrite Chip Inductors

Type: FI32T- □□□ J-PF

Contents

1. Product Identification……3
2. Rating……3
3. Form and dimension……..… 5
4. Construction…… 5
5. Mechanical strength……..6
6. Resistance to soldering heat……..…7
7. Solder ability test…….. 7
8. Thermal shock…….. 8
9. Low temperature storage…….. 8
10. High temperature storage……..8
11. Moisture storage……8
12. The recommended Soldering condition……9
13. Package……. 10
14. Test Data……12
15. SGS Certification

1. Product Identification

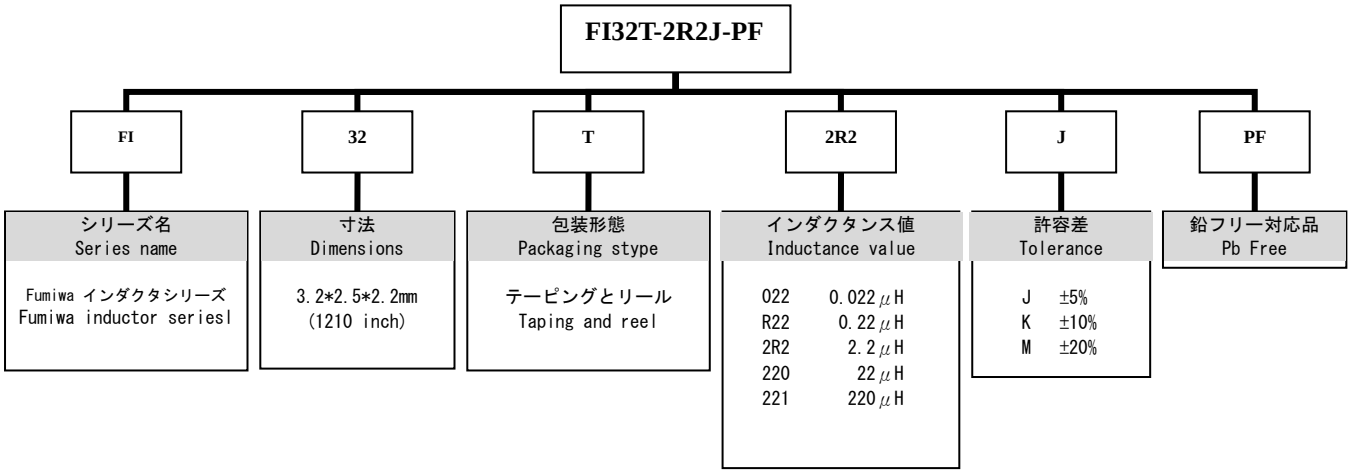

2. Rating

インダクタンス Inductance(uH)	インダクタンス許容差 Inductance tolerance	Q min	L、Q測定周波数 Test Frequency L,Q (MHz)	自己共振周波数 Self-resonant frequency (MHZ)min.	直流抵抗 DC resistance (Ω)max	定格電流 Rated current (mA)max	品名 Part No.
0.01	±5%	15	100	2500	0.13	450	FI32T-010J-PF
0.012	±5%	17	100	2300	0.14	450	FI32T-012J-PF
0.015	±5%	19	100	2100	0.16	450	FI32T-015J-PF
0.018	±5%	21	100	1900	0.18	450	FI32T-018J-PF
0.022	±5%	23	100	1700	0.2	450	FI32T-022J-PF
0.027	±5%	23	100	1500	0.22	450	FI32T-027J-PF
0.033	±5%	25	100	1400	0.24	450	FI32T-033J-PF
0.039	±5%	25	100	1300	0.27	450	FI32T-039J-PF
0.047	±5%	26	100	1200	0.3	450	FI32T-047J-PF
0.056	±5%	26	100	1100	0.33	450	FI32T-056J-PF
0.068	±5%	27	100	1000	0.36	450	FI32T-068J-PF
0.082	±5%	27	100	900	0.4	450	FI32T-082J-PF
0.1	±5%	28	100	700	0.44	450	FI32T-R10J-PF
0.12	±5%	30	25.2	500	0.22	450	FI32T-R12J-PF
0.15	±5%	30	25.2	450	0.25	450	FI32T-R15J-PF
0.18	±5%	30	25.2	400	0.28	450	FI32T-R18J-PF
0.22	±5%	30	25.2	350	0.32	450	FI32T-R22J-PF
0.27	±5%	30	25.2	320	0.36	450	FI32T-R27J-PF
0.33	±5%	30	25.2	300	0.4	450	FI32T-R33J-PF
0.39	±5%	30	25.2	250	0.45	450	FI32T-R39J-PF

インダクタンス Inductance(uH)	インダクタンス許容差 Inductance tolerance	Q min	L、Q測定周波数 Test Frequency L,Q (MHz)	自己共振周波数 Self-resonant frequency (MHZ)min.	直流抵抗 DC resistance (Ω)max	定格電流 Rated current (mA)max	品名 Part No.
0.47	±5%	30	25.2	220	0.5	450	FI32T-R47J-PF
0.56	±5%	30	25.2	180	0.55	450	FI32T-R56J-PF
0.68	±5%	30	25.2	160	0.6	450	FI32T-R68J-PF
0.82	±5%	30	25.2	140	0.65	450	FI32T-R82J-PF
1	±5%	30	7.96	120	0.7	400	FI32T-1R0J-PF
1.2	±5%	30	7.96	100	0.75	390	FI32T-1R2J-PF
1.5	±5%	30	7.96	85	0.85	370	FI32T-1R5J-PF
1.8	±5%	30	7.96	80	0.9	350	FI32T-1R8J-PF
2.2	±5%	30	7.96	75	1	320	FI32T-2R2J-PF
2.7	±5%	30	7.96	70	1.1	290	FI32T-2R7J-PF
3.3	±5%	30	7.96	60	1.2	260	FI32T-3R3J-PF
3.9	±5%	30	7.96	55	1.3	250	FI32T-3R9J-PF
4.7	±5%	30	7.96	50	1.5	220	FI32T-4R7J-PF
5.6	±5%	30	7.96	45	1.6	200	FI32T-5R6J-PF
6.8	±5%	30	7.96	40	1.8	180	FI32T-6R8J-PF
8.2	±5%	30	7.96	35	2	170	FI32T-8R2J-PF
10	±5%	30	2.52	30	2.1	150	FI32T-100J-PF
12	±5%	30	2.52	20	2.5	140	FI32T-120J-PF
15	±5%	30	2.52	20	2.8	130	FI32T-150J-PF
18	±5%	30	2.52	20	3.3	120	FI32T-180J-PF
22	±5%	30	2.52	20	3.7	110	FI32T-220J-PF
27	±5%	30	2.52	18	5	80	FI32T-270J-PF
33	±5%	30	2.52	17	5.6	70	FI32T-330J-PF
39	±5%	30	2.52	16	6.4	65	FI32T-390J-PF
47	±5%	30	2.52	15	7	60	FI32T-470J-PF
56	±5%	30	2.52	13	8	55	FI32T-560J-PF
68	±5%	30	2.52	12	9	50	FI32T-680J-PF
82	±5%	30	2.52	11	10	45	FI32T-820J-PF
100	±5%	20	0.796	10	10	40	FI32T-101J-PF
120	±5%	20	0.796	10	11	70	FI32T-121J-PF
150	±5%	20	0.796	7	15	65	FI32T-151J-PF
180	±5%	20	0.796	7	17	60	FI32T-181J-PF
220	±5%	20	0.796	7	21	50	FI32T-221J-PF
270	±5%	20	0.796	6	28	45	FI32T-270J-PF
330	±5%	20	0.796	5	34	40	FI32T-331J-PF

3. Form and dimension

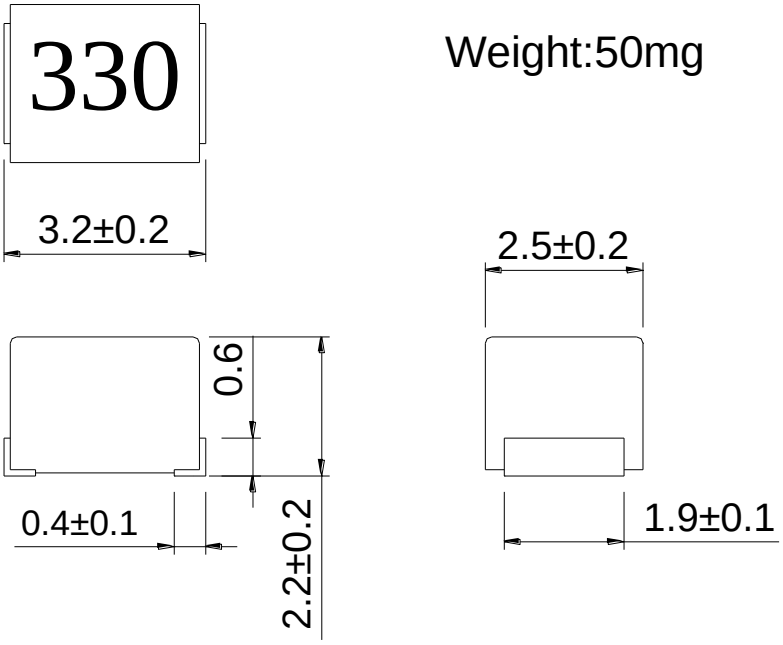

4. Construction

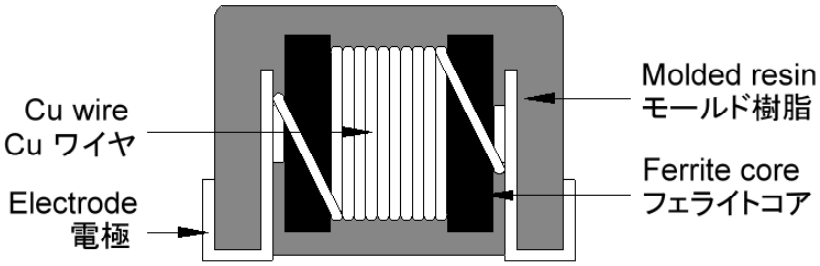

4-1. The Recommended land pattern:

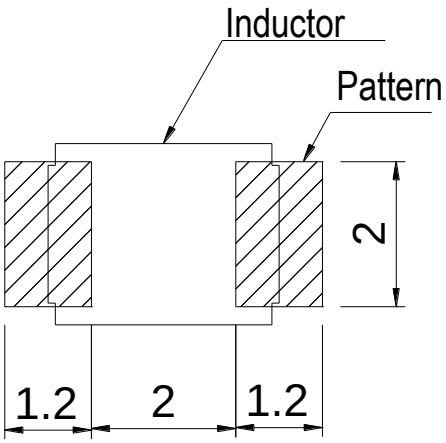

5. Mechanical Strength

5-1. Bending test

Test Method Soldered sample on PC board to be bend down to 2mm as below drawing

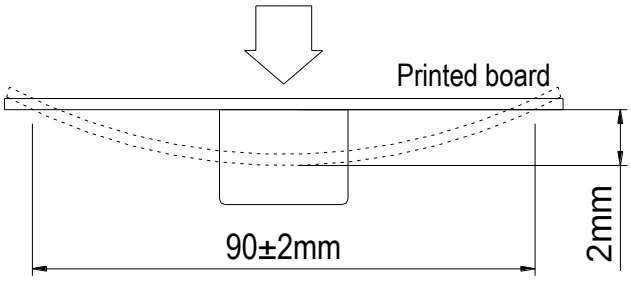

Number of samples n=10

Results *Appearance : No looseness and damage

5-2. Drop test

Test Method The sample shall be subject to “drop test” illustrated in following figure.

At the completion of the “drop test”, there shall be no abnormality in functioning

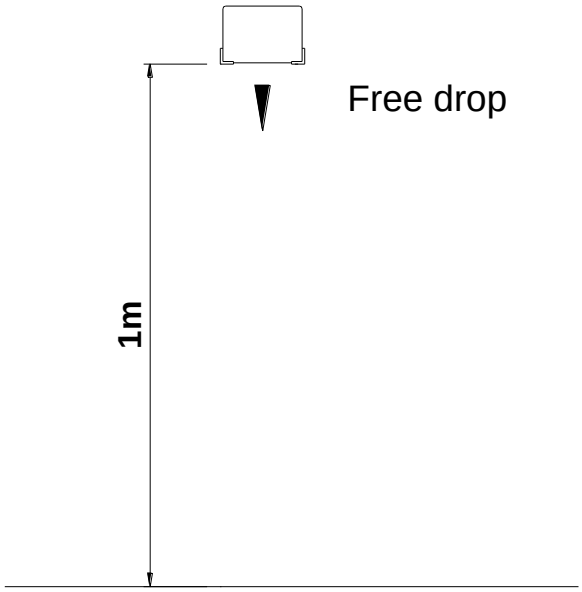

Number of samples n=10

Results *Appearance : No looseness

*Inductance change rate : ⊿L/L0≦±5%

5-3. Pressing strength

Test Method Apply 4.9N load for 5 Sec, as shown by following figure.

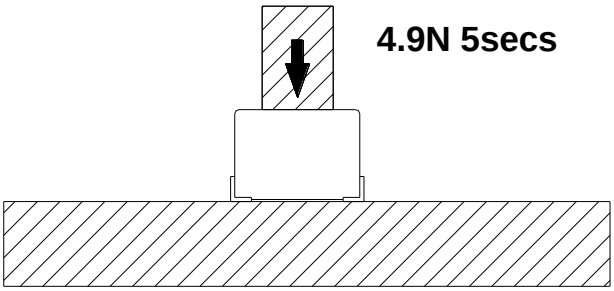

Number of samples n=10

Results *Appearance : No looseness and damage

5-4. Vibration test.

Test Method Submit the sample to a vibration test in X, Y and Z directions, 2 hours for each direction.

Vibration freq.: 10～55Hz

Amplitude : 1.5mm

Number of samples n=10

Results *Appearance : No looseness

*Inductance change rate : ⊿L/L0≦±5%

6. Resistance to soldering heat

Test Method Dipping the sample into solder bath.

Pre-heat : 150+0/-20℃, 2 minutes.

Soak into the solder bath: 260±5℃, 10±1 seconds.

Number of samples n=10

Results *Appearance : No looseness and damage

*Inductance change rate : ⊿L/L0≦±5%

7. Solder ability test

Test Method Dipping the sample into solder bath.

Pre-heat : 150+0/-20℃, 2 minutes.

Soak into the solder bath: 230±5℃, 4±1 seconds.

Number of samples n=10

Results *Appearance : No looseness and damage

*Not less than 90% of the electrode sections shall be newly coated with solder smoothly when the sample is taken out of the solder bath.

8. Thermal shock

Test Method Exposure sample at the conditions in the figure below, characteristics are measured after the ambient air exposure of 1 or 2 hours.

100 cycles of +85℃ for 30 minutes, -40℃ for 30 minutes.

Number of samples n=10

Results *Appearance : No looseness

*Inductance change rate : ⊿L/L0≦±5%

*Inductance change rate : ⊿Q/Q0≦±30%

9. Low temperature storage

Test Method Exposure sample at -40℃, for 1000 hours. Characteristics are measured after the ambient air exposure of 1 or 2 hours.

Number of samples n=10

Results *Appearance : No looseness

*Inductance change rate : ⊿L/L0≦±5%

*Inductance change rate : ⊿Q/Q0≦±30%

10.High temperature storage

Test Method Exposure sample at 85℃, for 1000 hours. Characteristics are measured after the ambient air exposure of 1 or 2 hours.

Number of samples n=10

Results *Appearance : No looseness

*Inductance change rate : ⊿L/L0≦±5%

*Inductance change rate : ⊿Q/Q0≦±30%

11. Moisture storage

Test Method Exposure sample at60℃, 95%RH for 1000 hours. Characteristics are measured after the ambient air exposure of 1 or 2 hours.

Number of samples n=10

Results *Appearance : No looseness

*Inductance change rate : ⊿L/L0≦±5%

*Inductance change rate : ⊿Q/Q0≦±30%

12. The recommended Soldering conditions

12.1 Reflow soldering

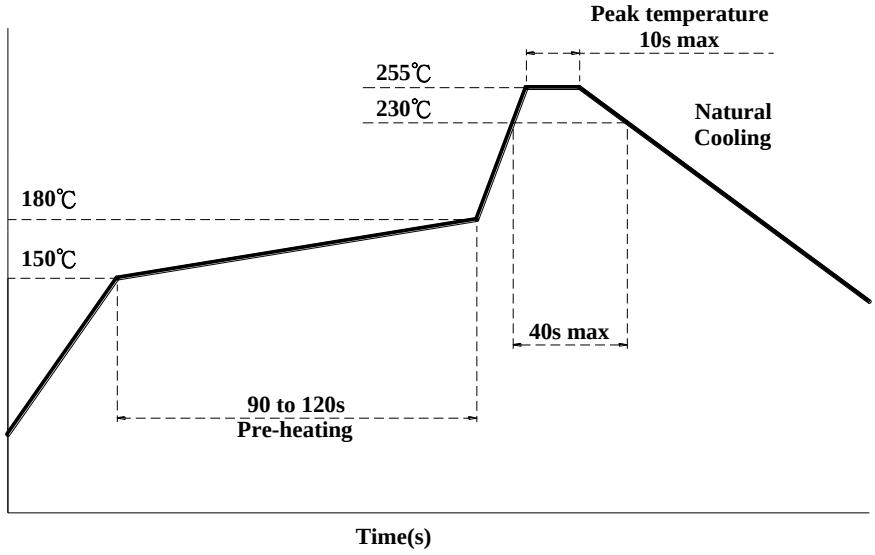

12.2 Flow soldering

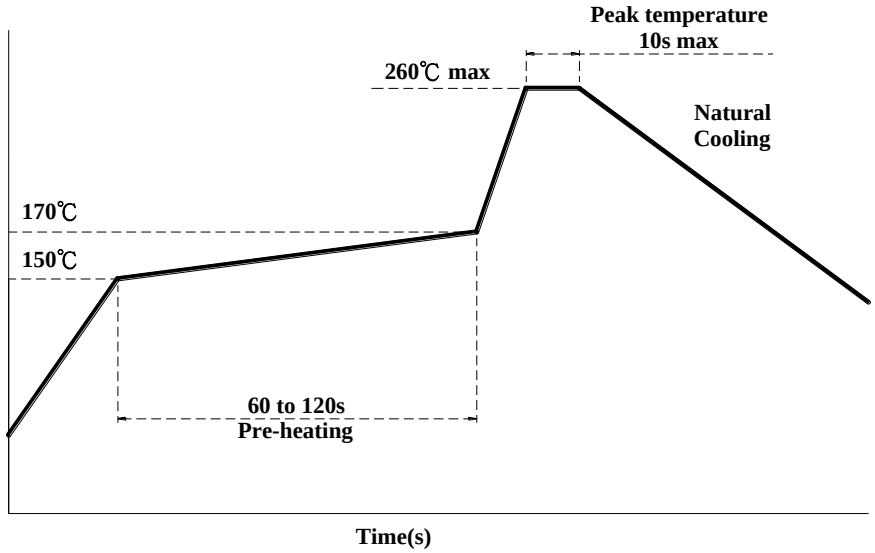

12.3 Iron soldering

Tip temperature	300 to 350℃
Heating time	3 sec/soldering
Soldering rod specifications	Output: 30W Tip diameter: 1mm

Based on the above conditions, use a maximum product temperature of 260℃ and a maximum accumulated heating time of 10 seconds as a guideline.

13. Package

(1) Taping specifications

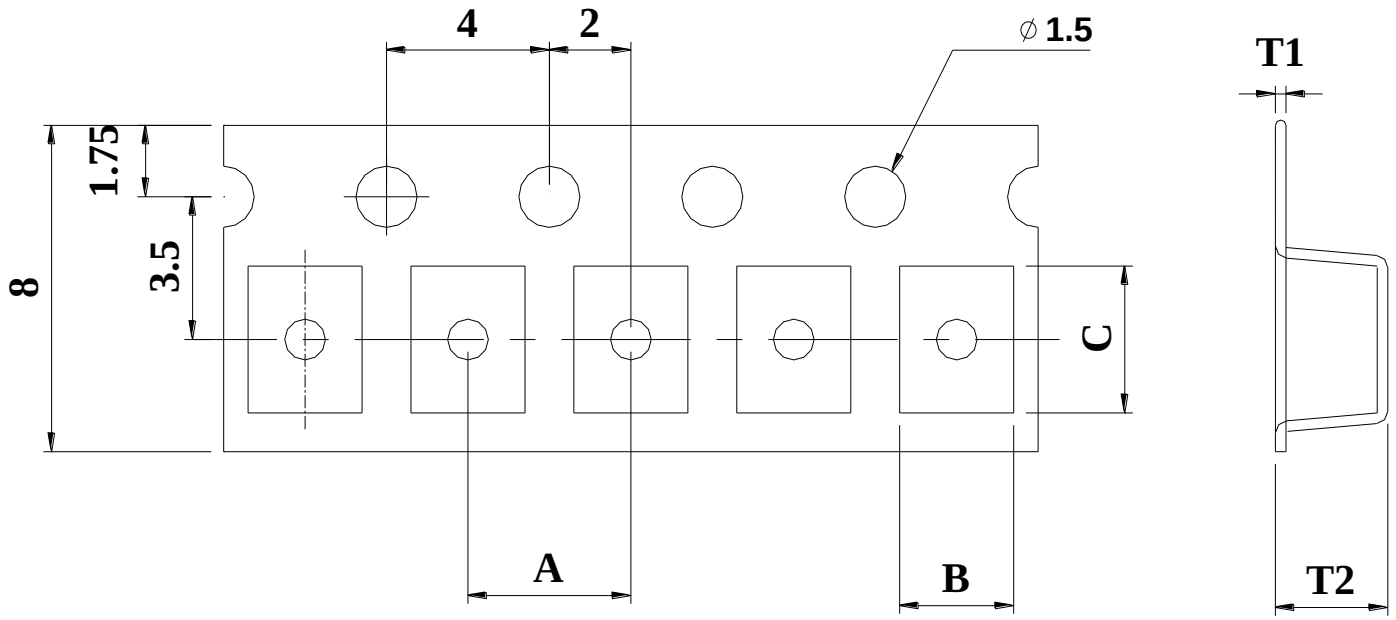

Product	Product's thickness (mm)	A (mm)	B (mm)	C (mm)	T1 (mm)	T2 (mm)	QTY
FI3225	2.2±0.2	4.0	2.8	3.5	0.3	2.45	2000Pcs/reel

(2) Reel Specifications

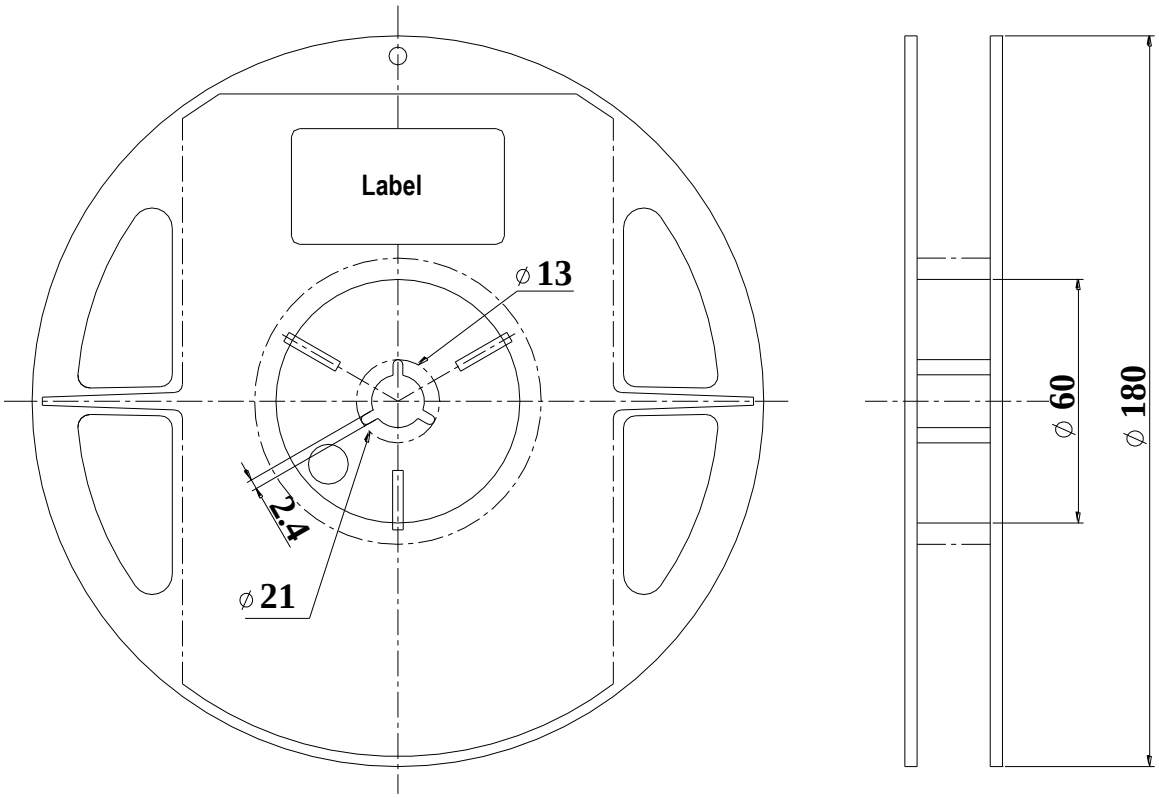

Label:

Wire Wound Ferrite Core Chip Inductors FI32T-2R2J-PF 2000 PCS Lot No._____ FUMIWA TECHNICAL CO., LTD.

	Type	Size(mm)	Q'ty
1	7" Plastic reel	φ 180*11	2000pcs
2	Box	185* 90 *190	5 Reel
3	Carton	480 * 195 * 200	5 box

19. RoHS COMPLICANCE

Conforming to “RoHS compliance”

- The products conform to “RoHS compliance”
- ”conformity to RoHS Directive”: This means that, in conformity with EU Directive 2002/95/EC, lead, cadmium, mercury, hexavalent chromium, and specific bromine-based flame retardants, PBB and PBDE, have not been used, except for exempted applications.

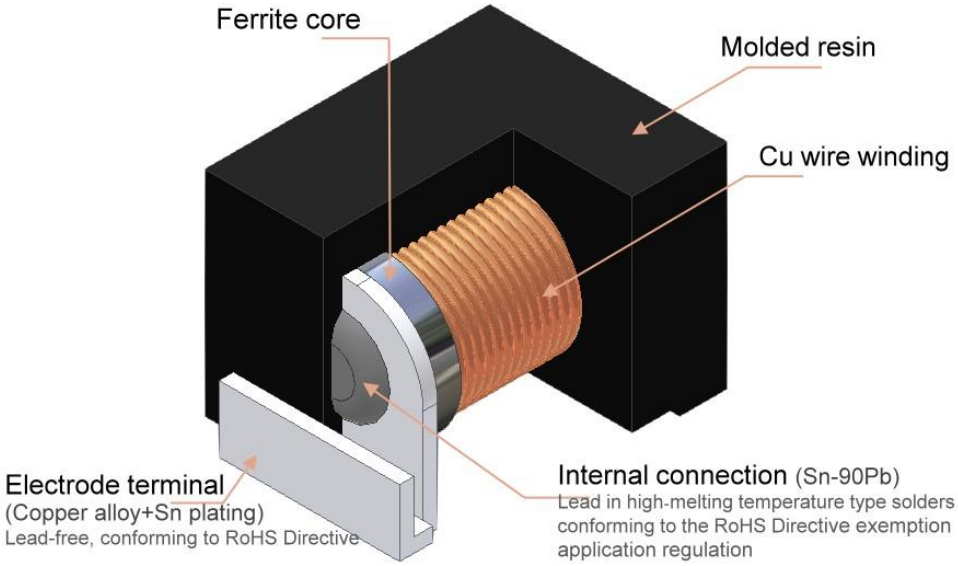

ITEM	Material Name	Vender	Substance	Test Reprots No.	Content of Environment-rated Substance					
					Cd	Pb	Hg	Cr+6	PBBs	PBDEs
1	Ferrite Core	TDK	Fe, Ni, Zn, Cu	THJ0015824	N.D.	177	N.D.	N.D.	N.A	N.A
2	Copper Wire	WELL FORE	Copper	CE/2006/81528	N.D.	N.D.	N.D.	N.D.	N.A	N.A
3	Electrode	Electrode Maker	Copper Frame	CE/2007	N.D.	N.D.	N.D.	N.D.	N.A	N.A
4	Winding Wire	Elektrisola	Cu Polyester resin	LPCI/10026/06	N.D.	N.D.	N.D.	N.D.	N.D.	N.D.
5	ADHESIVE	SHAW HUOW	EPOXY RESIN-ONE COMPONENT	CE/2007/13165	N.D.	N.D.	N.D.	N.D.	N.D.	N.D.
6	Solder * (internal connection)	Solder maker	Lead (Pb) Tin (Sn)	97804-R1	N.D.	89.80%	N.D.	N.D.	N.A.	N.A.
7	Molding Compound	CHANG CHUN	EPOXY RESIN Phenolic Resin	CE/2006/B3908	N.D.	N.D.	N.D.	N.D.	N.D.	N.D.
8	Sn Plating	茗輝	Sn Additive	CE/2006/A0085A	N.D.	70.4	N.D.	N.D.	N.A.	N.A.

*Hight-melting solder conforming to the RoHS Directive exemption application regulation.